Environmental Product Declaration

according to ISO 14025 and EN 15804

MRPI
milieu relevante product informatie

This declaration is for:

Curtain wall FT01a of "n2" London

Provided by:

Scheldebouw b.v.

- Permasteelisa Group

PERMASTEELISA GROUP



program operator

Stichting MRPI®

publisher

Stichting MRPI®

www.mrpi.nl

MRPI® registration

1.1.00325.2022

date of first issue

22-09-2022

date of this issue

22-09-2022

expiry date

22-09-2027

ECO PLATFORM
EPD
VERIFIED

COMPANY INFORMATION

Scheldebouw b.v. - Permasteelisa Group
Herculesweg 17
4338 PL
Middelburg
0031 (0)118 679 900
scheldebouw@permasteelisagroup.com
https://scheldebouw.permasteelisagroup.com

MRPI® REGISTRATION

1.1.00325.2022

DATE OF ISSUE

22-09-2022

EXPIRY DATE

22-09-2027

PRODUCT

Curtain wall FT01a of "n2" London

DECLARED UNIT/FUNCTIONAL UNIT

1 piece

DESCRIPTION OF PRODUCT

One typical curtain wall facade element FT01A of the project "n2", London, including fixings and closures. Size: 1.5 x 3.55 = 5.325 m².

VISUAL PRODUCT



MORE INFORMATION

https://scheldebouw.permasteelisagroup.com

SCOPE OF DECLARATION

This MRPI®-EPD certificate is verified by **U. Hofstra, SGS INTRON b.v..**
The LCA study has been done by **G.J. van Beijnum, Nibe b.v..**
The certificate is based on an LCA-dossier according to ISO14025 and EN15804+A2. It is verified according to the 'MRPI®-EPD verification protocol November 2020.v4.0'. EPDs of construction products may not be comparable if they do not comply with EN15804+A2. Declaration of SVHC that are listed on the 'Candidate List of Substances of Very High Concern for authorisation' when content exceeds the limits for registration with ECHA.

PROGRAM OPERATOR

Stichting MRPI®
Kingsfordweg 151
1043GR
Amsterdam

ir. J-P den Hollander, Managing director MRPI®

DEMONSTRATION OF VERIFICATION
CEN standard EN15804 serves as the core PCR[a]
Independent verification of the declaration and data, according to EN ISO 14025:2010: internal: external: X
Third party verifier: U. Hofstra, SGS INTRON b.v.
[a] PCR = Product Category Rules

DETAILED PRODUCT DESCRIPTION

One typical curtain wall facade element FT01A of the project "n2", London, including fixings and closures.
Size: 1.5 x 3.55 = 5.325 m².
Weight: 357.23 kg.
Performance in accordance with DoP and CE-marking nr. 2021-91211.

Consisting of the following parts:
Glazing: 55.2-16-5-18-44.2
Spandrel: 3 mm aluminium sheet, air cavity, 220 mm rockwool, 1.5 mm steel sheet
Aluminium profiles: 225 mm deep with 145 mm deep fins
Firestop at floor edge: 125 x 120 mm Lamatherm (stone wool) with 1.5 mm steel sheet on top

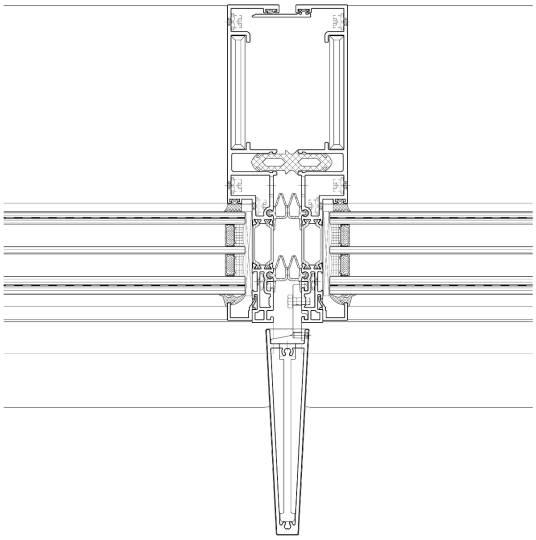

FT01A - Typical mullion

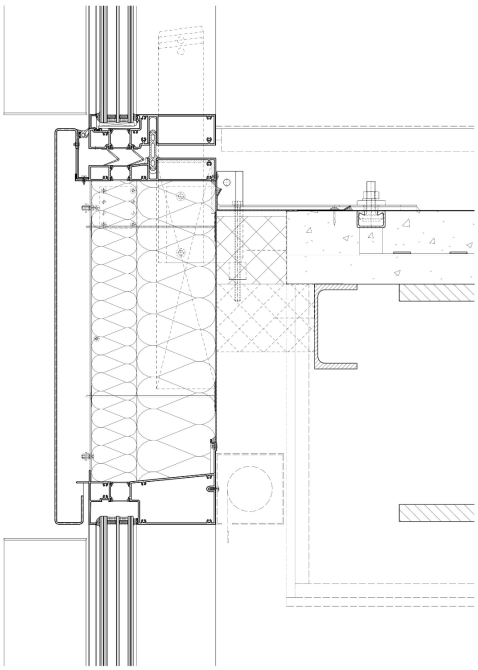

FT01A - Typical floor edge detail

RSL Product
The curtain wall facade has a reference service life of 60 years.

RSL parts
The facade consists of various parts with different service lifetimes. During the reference service life (RSL) of the facade (60 years), several parts like glazing, sealants and gaskets need to be replaced. The replacement of these parts has been accounted for in life cycle stage B3.
The reference service life of the product parts in this report is based on the estimated service life, as defined in BS ISO 15686-1, which Scheldebouw provides to the client in their general guarantees and warranties schedule.

Product part	RSL
Laminated triple glazing	25 years
EPDM gaskets	30 years
Sealant	25 years
All other parts	60 years

COMPONENT >1% of total mass	[kg / %]
Laminated triple glazing	243.14 kg
Anodised aluminium extrusions	21.16 kg
Powder coated aluminium extrusions	31.68 kg
Thermal breaks	2.46 kg *
Anodised aluminium sheets	15.90 kg
Mineral wool insulation	10.43 kg
Pre-galvanised steel sheets	17.72 kg
Galvanised steel bracket plate	6.30 kg
EPDM gaskets	6.68 kg
Chromium steel parts e.g. fasteners	1.15 kg *
Sealant	0.61 kg *

(*) < 1% of total mass, but included for completeness of the assessment

SCOPE AND TYPE

The input data are representative for facade type FT01A of the project “n2” in London, a product produced by Scheldebouw B.V. in Middelburg, The Netherlands. The data are representative for building site London and production location Middelburg with suppliers located in Europe. In absence of predefined waste / end-of-life scenarios for the United Kingdom, the Dutch scenarios are used, because they are deemed representative.

Scheldebouw works with a variety of suppliers, which are not known at the start of a project. The aim of this LCA is to define a baseline performance which Scheldebouw can always deliver regardless of project specific agreements with suppliers. The material quantities are based on the specific facade configuration of FT01A of the project "n2".

LCA Method: EN15804+A2:2019
LCA Software: Simapro 9.1.1
Characterisation method: EN 15804 +A2 Method v1.0
LCA database profiles: EcoInvent version 3.6
Version database: v3.09 (2022-05-10)

PRODUCT STAGE			CONSTRUCTION PROCESS STAGE		USE STAGE							END OF LIFE STAGE				BENEFITS AND LOADS BEYOND THE SYSTEM BOUNDARIES
Raw material supply	Transport	Manufacturing	Transport gate to site	Assembly	Use	Maintenance	Repair	Replacement	Refurbishment	Operational energy use	Operational water use	De-construction demolition	Transport	Waste processing	Disposal	Reuse-Recovery-Recycling-potential
A1	A2	A3	A4	A5	B1	B2	B3	B4	B5	B6	B7	C1	C2	C3	C4	D
x	x	x	x	x	x	x	x	ND	ND	ND	ND	x	x	x	x	x

X = Modules Assessed

ND = Not Declared

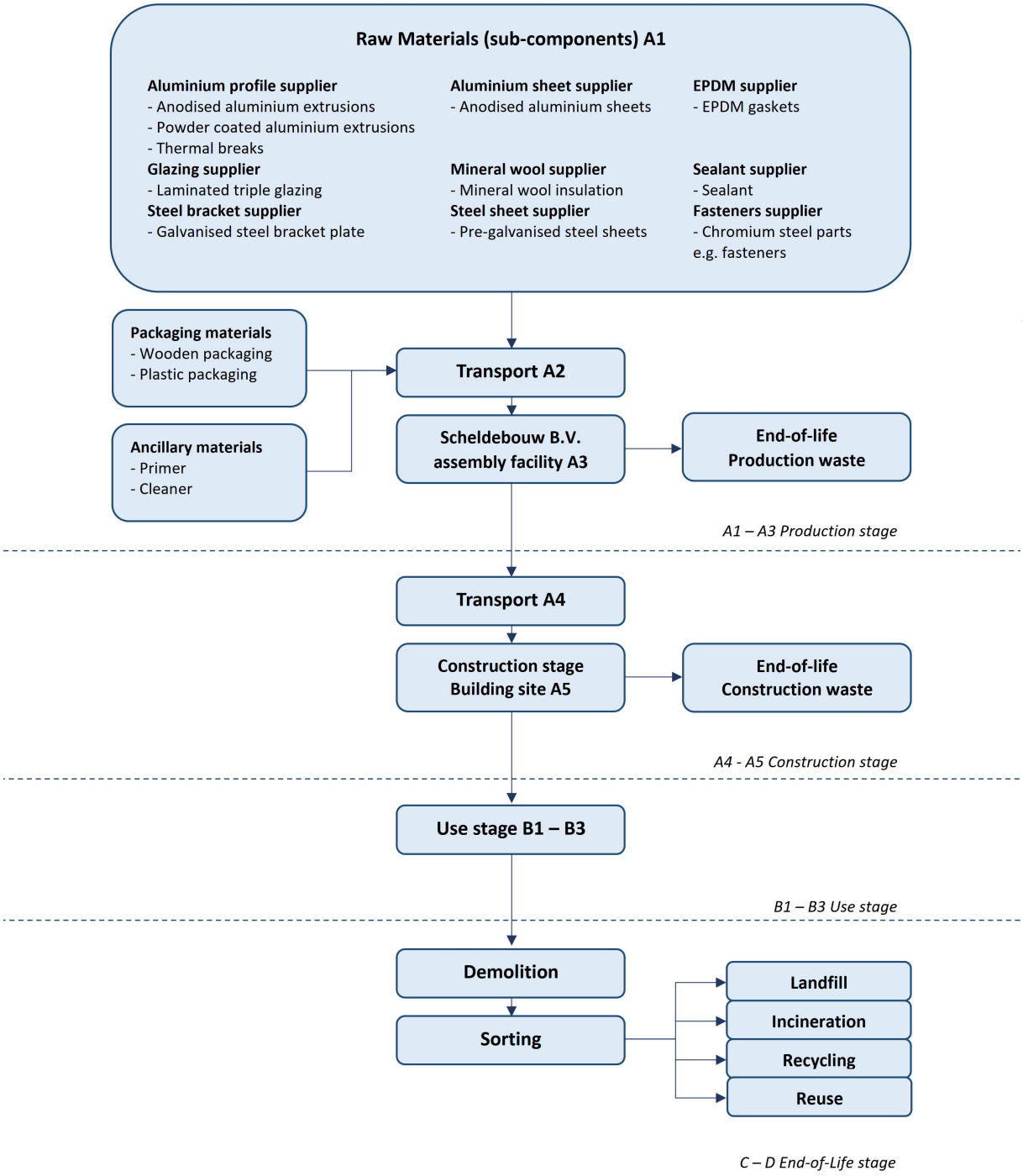

LCA process diagram according to EN 15804 (7.2.1)

REPRESENTATIVENESS

The input data are representative for facade type FT01A of the project “n2” in London, a product produced by Scheldebouw B.V. in Middelburg, The Netherlands. The data are representative for building site London and production location Middelburg with suppliers located in Europe.

ENVIRONMENTAL IMPACT per functional unit or declared unit (core indicators A2)

	UNIT	A1	A2	A3	A1-A3	A4	A5	B1	B2	B3	C1	C2	C3	C4	D
GWP-total	kg CO2 eq.	1.15 E+3	4.14 E+1	1.81 E+2	1.37 E+3	6.51 E+0	6.81 E+1	0.00	0.00	7.68 E+2	7.61 E-1	3.14 E+0	4.81 E+1	6.17 E-1	-6.47 E+2
GWP-fossil	kg CO2 eq.	1.13 E+3	4.14 E+1	2.01 E+2	1.38 E+3	6.51 E+0	5.42 E+1	0.00	0.00	7.62 E+2	7.60 E-1	3.14 E+0	4.64 E+1	6.14 E-1	-6.37 E+2
GWP-biogenic	kg CO2 eq.	3.79 E+0	1.91 E-2	-2.04 E+1	-1.66 E+1	2.35 E-3	1.37 E+1	0.00	0.00	5.84 E+0	5.47 E-4	1.45 E-3	1.76 E+0	2.76 E-3	-1.77 E+0
GWP-luluc	kg CO2 eq.	8.94 E+0	1.52 E-2	3.80 E-1	9.33 E+0	2.72 E-3	3.10 E-1	0.00	0.00	7.96 E-1	9.91 E-4	1.15 E-3	1.14 E-2	1.60 E-4	-7.81 E+0
ODP	kg CFC11 eq.	1.01 E-4	9.13 E-6	1.37 E-5	1.24 E-4	1.42 E-6	4.33 E-6	0.00	0.00	7.94 E-5	7.73 E-8	6.93 E-7	1.75 E-6	1.88 E-7	-4.53 E-5
AP	mol H+ eq.	8.55 E+0	2.40 E-1	6.94 E-1	9.48 E+0	5.37 E-2	3.11 E-1	0.00	0.00	6.05 E+0	2.93 E-3	1.82 E-2	9.66 E-2	4.24 E-3	-4.13 E+0
EP-freshwater	kg P eq.	4.94 E-2	4.17 E-4	9.47 E-3	5.93 E-2	6.20 E-5	1.92 E-3	0.00	0.00	2.44 E-2	2.12 E-5	3.17 E-5	6.14 E-4	6.06 E-6	-2.55 E-2
EP-marine	kg N eq.	1.22 E+0	8.46 E-2	1.32 E-1	1.44 E+0	1.64 E-2	4.89 E-2	0.00	0.00	1.03 E+0	5.33 E-4	6.41 E-3	1.88 E-2	1.53 E-3	-5.10 E-1
EP-terrestrial	mol N eq.	1.41 E+1	9.32 E-1	1.53 E+0	1.66 E+1	1.81 E-1	5.63 E-1	0.00	0.00	1.21 E+1	6.32 E-3	7.07 E-2	2.12 E-1	1.65 E-2	-6.56 E+0
POCP	kg NMVOC eq.	4.18 E+0	2.66 E-1	4.41 E-1	4.88 E+0	5.07 E-2	1.65 E-1	0.00	0.00	3.16 E+0	1.61 E-3	2.02 E-2	5.93 E-2	4.78 E-3	-1.92 E+0
ADP-minerals & metals	kg Sb eq.	1.07 E-1	1.05 E-3	3.66 E-2	1.45 E-1	1.54 E-4	3.44 E-3	0.00	0.00	2.49 E-2	5.56 E-6	7.95 E-5	4.14 E-4	4.05 E-6	2.42 E-1
ADP-fossil	MJ, net calorific value	1.48 E+4	6.24 E+2	2.87 E+3	1.82 E+4	9.65 E+1	6.04 E+2	0.00	0.00	9.47 E+3	1.85 E+1	4.73 E+1	1.70 E+2	1.31 E+1	-7.28 E+3
WDP	m3 world eq. deprived	3.84 E+2	2.23 E+0	5.10 E+1	4.37 E+2	3.30 E-1	1.39 E+1	0.00	0.00	1.70 E+2	3.32 E-2	1.69 E-1	2.70 E+0	1.33 E-1	-1.26 E+2

GWP-total = Global Warming Potential total
GWP-fossil = Global Warming Potential fossil fuels
GWP-biogenic = Global Warming Potential biogenic
GWP-luluc = Global Warming Potential land use and land use change
ODP = Depletion potential of the stratospheric ozone layer
AP = Acidification Potential, Accumulated Exceedence
EP-freshwater = Eutrophication Potential, fraction of nutrients reaching freshwater end compartment
EP-marine = Eutrophication Potential, fraction of nutrients reaching marine end compartment
EP-terrestrial = Eutrophication Potential, Accumulated Exceedence
POCP = Formation potential of tropospheric ozone photochemical oxidants
ADP-minerals&metals = Abiotic Depletion Potential for non fossil resources [2]
ADP-fossil = Abiotic Depletion for fossil resources potential [2]
WDP = Water (user) deprivation potential, deprivation-weighted water consumption [2]

Disclaimer [2]

- The results of this environmental impact indicator shall be used with care as the uncertainties on these results are high or as there is limited experience with the indicator.

ENVIRONMENTAL IMPACT per functional unit or declared unit (additional indicators A2)

	UNIT	A1	A2	A3	A1-A3	A4	A5	B1	B2	B3	C1	C2	C3	C4	D
PM	Disease incidence	8.08 E-5	3.72 E-6	4.69 E-6	8.92 E-5	5.45 E-7	2.92 E-6	0.00	0.00	5.90 E-5	9.47 E-9	2.82 E-7	1.19 E-6	8.51 E-8	-3.96 E-5
IRP	kBq U235 eq.	5.95 E+1	2.61 E+0	6.84 E+0	6.90 E+1	4.05 E-1	2.53 E+0	0.00	0.00	3.48 E+1	3.06 E-1	1.98 E-1	7.43 E-1	5.56 E-2	-2.59 E+1
ETP-fw	CTUe	3.23 E+4	5.57 E+2	3.66 E+3	3.65 E+4	8.42 E+1	1.33 E+3	0.00	0.00	1.98 E+4	1.17 E+1	4.22 E+1	1.18 E+3	1.29 E+3	-1.53 E+4
HTP-c	CTUh	2.01 E-6	1.81 E-8	1.12 E-7	2.14 E-6	2.99 E-9	7.31 E-8	0.00	0.00	4.31 E-7	2.45 E-10	1.37 E-9	1.92 E-8	2.30 E-10	-1.08 E-6
HTP-nc	CTUh	2.93 E-5	6.09 E-7	2.51 E-6	3.24 E-5	9.05 E-8	1.09 E-6	0.00	0.00	9.57 E-6	8.27 E-9	4.62 E-8	5.54 E-7	7.01 E-9	-9.91 E-6
SQP	---	3.77 E+3	5.41 E+2	2.45 E+3	6.76 E+3	7.73 E+1	2.29 E+2	0.00	0.00	3.66 E+3	1.06 E+1	4.11 E+1	1.61 E+2	2.78 E+1	-1.88 E+3

PM = Potential incidence of disease due to PM emissions
IRP = Potential Human exposure efficiency relative to U235 [1]
ETP-fw = Potential Comparative Toxic Unit for ecosystems [2]
HTP-c = Potential Comparative Toxic Unit for humans [2]
HTP-nc = Potential Comparative Toxic Unit for humans, non-cancer [2]
SQP = Potential soil quality index [2]

Disclaimer [1]

- This impact category deals mainly with the eventual impact of low dose ionizing radiation on human health of the nuclear fuel cycle. It does not consider effects due to possible nuclear accidents, occupational exposure nor due to radioactive waste disposal in underground facilities. Potential ionizing radiation from the soil, from radon and from some construction materials is also not measured by this indicator.

Disclaimer [2]

- The results of this environmental impact indicator shall be used with care as the uncertainties on these results are high or as there is limited experience with the indicator.

RESOURCE USE per functional unit or declared unit (A1 / A2)

	UNIT	A1	A2	A3	A1-A3	A4	A5	B1	B2	B3	C1	C2	C3	C4	D
PERE	MJ	2.88 E+3	7.81 E+0	5.26 E+2	3.42 E+3	1.17 E+0	1.13 E+2	0.00	0.00	7.29 E+2	3.45 E+0	5.93 E-1	4.30 E+0	2.47 E+0	-1.95 E+3
PERM	MJ	0.00	0.00	0.00	0.00	0.00	0.00	0.00	0.00	0.00	0.00	0.00	0.00	0.00	-7.87 E+0
PERT	MJ	2.88 E+3	7.81 E+0	5.27 E+2	3.42 E+3	1.17 E+0	1.14 E+2	0.00	0.00	7.27 E+2	3.45 E+0	5.93 E-1	1.76 E+1	2.56 E-1	-2.04 E+3
PENRE	MJ	1.55 E+4	6.63 E+2	2.88 E+3	1.90 E+4	1.03 E+2	6.22 E+2	0.00	0.00	9.92 E+3	1.95 E+1	5.03 E+1	4.53 E+1	4.65 E+1	-6.58 E+3
PENRM	MJ	2.74 E+2	0.00	2.02 E+2	4.75 E+2	0.00	1.43 E+1	0.00	0.00	2.51 E+2	0.00	0.00	0.00	0.00	-2.65 E+1
PENRT	MJ	1.57 E+4	6.63 E+2	3.08 E+3	1.95 E+4	1.03 E+2	6.45 E+2	0.00	0.00	1.01 E+4	1.95 E+1	5.03 E+1	1.82 E+2	1.39 E+1	-7.77 E+3
SM	kg	2.36 E+1	0.00	2.64 E+0	2.62 E+1	0.00	7.87 E-1	0.00	0.00	0.00	0.00	0.00	0.00	0.00	0.00
RSF	MJ	0.00	0.00	0.00	0.00	0.00	0.00	0.00	0.00	0.00	0.00	0.00	0.00	0.00	0.00
NRSF	MJ	0.00	0.00	0.00	0.00	0.00	0.00	0.00	0.00	0.00	0.00	0.00	0.00	0.00	0.00
FW	m3	2.11 E+1	7.60 E-2	2.24 E+0	2.34 E+1	1.12 E-2	7.63 E-1	0.00	0.00	5.61 E+0	3.60 E-3	5.77 E-3	1.32 E-1	1.49 E-2	-1.15 E+1

PERE = Use of renewable energy excluding renewable primary energy resources
PERM = Use of renewable energy resources used as raw materials
PERT = Total use of renewable primary energy resources
PENRE = Use of non-renewable primary energy resources excluding non-renewable energy resources used as raw materials
PENRM = Use of non-renewable primary energy resources used as raw materials
PENRT = Total use of non-renewable primary energy resources
SM = Use of secondary materials
RSF = Use of renewable secondary fuels
NRSF = Use of non renewable secondary fuels
FW = Use of net fresh water

OUTPUT FLOWS AND WASTE CATEGORIES per functional unit or declared unit (A1 / A2)

	UNIT	A1	A2	A3	A1-A3	A4	A5	B1	B2	B3	C1	C2	C3	C4	D
HWD	kg	2.79 E-1	1.58 E-3	1.43 E-1	4.24 E-1	2.31 E-4	2.36 E-2	0.00	0.00	4.73 E-2	1.37 E-5	1.20 E-4	4.27 E-1	1.51 E-5	5.35 E-1
NHWD	kg	2.26 E+2	3.96 E+1	2.09 E+1	2.87 E+2	5.59 E+0	1.41 E+1	0.00	0.00	2.55 E+2	4.93 E-2	3.00 E+0	1.14 E+1	8.62 E+1	-1.40 E+2
RWD	kg	5.73 E-2	4.10 E-3	6.78 E-3	6.82 E-2	6.37 E-4	2.36 E-3	0.00	0.00	3.80 E-2	1.51 E-4	3.11 E-4	8.28 E-4	8.55 E-5	-2.47 E-2
CRU	kg	0.00	0.00	0.00	0.00	0.00	0.00	0.00	0.00	0.00	0.00	0.00	0.00	0.00	0.00
MFR	kg	0.00	0.00	1.39 E+1	1.39 E+1	0.00	8.97 E+0	0.00	0.00	2.53 E+2	0.00	0.00	2.60 E+2	0.00	0.00
MER	kg	0.00	0.00	0.00	0.00	0.00	0.00	0.00	0.00	0.00	0.00	0.00	0.00	0.00	0.00
EEE	MJ	0.00	0.00	7.30 E+0	7.30 E+0	0.00	0.00	0.00	0.00	0.00	0.00	0.00	0.00	0.00	1.07 E+2
ETE	MJ	0.00	0.00	1.26 E+1	1.26 E+1	0.00	0.00	0.00	0.00	0.00	0.00	0.00	0.00	0.00	1.84 E+2

HWD = Hazardous Waste Disposed
NHWD = Non Hazardous Waste Disposed
RWD = Radioactive Waste Disposed
CRU = Components for reuse
MFR = Materials for recycling
MER = Materials for energy recovery
EEE = Exported Electrical Energy
ETE = Exported Thermal Energy

BIOGENIC CARBON CONTENT per functional unit or declared unit (A1 / A2)

	UNIT	A1	A2	A3	A1-A3	A4	A5	B1	B2	B3	C1	C2	C3	C4	D
BCCpr	kg C	0.00	0.00	0.00	0.00	0.00	0.00	0.00	0.00	0.00	0.00	0.00	0.00	0.00	0.00
BCCpa	kg C	0.00	0.00	5.46 E+0	5.46 E+0	0.00	0.00	0.00	0.00	0.00	0.00	0.00	0.00	0.00	0.00

BCCpr = Biogenic carbon content in product
BCCpa = Biogenic carbon content in packaging

CALCULATION RULES

CUT-OFF CRITERIA

There is no cut-off applied for the inputs or outputs of any of the processes.

TIME PERIOD DATA COLLECTION

Background data is primarily based on EcoInvent 3.6. Foreground data is <2 years and background data <10 years. The data quality is considered to be good.
material quantities: 2022
suppliers: 2019-2021
factory and building site: 2020
emissions: n/a

ALLOCATION

Allocation is applied for recycling at end-of-life of various materials according to EN 15804 rules.

SCENARIOS AND ADDITIONAL TECHNICAL INFORMATION

Life cycle stages A1-A3 (production)

Scheldebouw B.V. produce the curtain wall panels in their factory in Middelburg. The various parts and materials are sourced from various suppliers as semi-finished products, enter the factory and are assembled into a facade panel. After assembly, the facade elements are packed and made ready for transport to the building site together with the brackets and other materials for fixing and/or closure.
Semi-finished products of the suppliers (cradle to supplier gate) are included in stage A1 of this LCA study. The transport movements between suppliers and Scheldebouw are included in stage A2 and all activities in the Scheldebouw assembly location in Middelburg are included in stage A3.
The production stage consists of the extraction of raw materials, transportation of the raw materials, processing the raw materials into sub-components and the assembly of the sub-components into the end-product. The required energy for production, external treatments, ancillary materials, packaging material and production emissions are included.

Average supplier distances (stage A2)	km
Glazing	1000
Aluminium profiles	877
Aluminium sheets	372
Mineral wool	199
Steel sheets	161
Steel brackets	206
Gaskets	390
Fasteners	156
Sealant, incl. primer and cleaner	104
Wooden packaging	7.4
Plastic packaging	0.75

Ancillary materials and packaging (stage A3)	amount
Plastic packaging	3.674 kg
Wooden packaging	10.93 kg
Primer	0.367 kg
Cleaner	0.080 kg

Life cycle stages A4-A5 (construction)

This stage consists of the transport of the product from production plant to the construction site. It also includes the loss of material during construction. The additional needed production, transport and end-of-life treatment of the lost material during construction is included. The end-of-life of packaging material up to the end-of-waste state or disposal of final residues is also included. The energy use for installation of the product is taken into account.

The facade elements are delivered on the building site including fastening and closure materials (floor brackets and fire stop). The facade elements are lifted up with a crane and installed onto the floors of the building. After that, the floor edge detail is completed by applying the fire stop and steel sheets.

The transport movements between Scheldebouw Middelburg and the building site are included in stage A4 and all activities on the building site are included in stage A5.The use of the tower crane is excluded from this LCA, because it is a capital good.

Transport to the construction site consists of the following:

Transport conveyance (stage A4)	Distance	Weight x distance
Lorry (truck): Middelburg-Rotterdam	85 km	
Transoceanic ship: Rotterdam-Purfleet	282 km	
Lorry (truck): Purfleet-London	31 km	
Total:	398 km	147.99 tkm

Life cycle stages B1-B3 (use stage)
This stage consists of the impacts arising from components of the building and construction works during their use. No specific maintenance actions are necessary during the service life to maintain the product in a state in which it can perform its required functional and technical performance, as well as preserve the aesthetic qualities of the product.

The facade consists of various parts with different service lifetimes. During the reference service life (RSL) of the facade (60 years), several parts like glazing, sealants and gaskets need to be replaced. The replacement of these parts has been accounted for in life cycle stage B3.
Product replacement (B4) and renovation (B5) are not considered. Operational water and energy use (B6-7) are not considered.

Life cycle stages C1-C4 (end of life)
When the end of the life stage of the building is reached, the de-construction/demolition begins. This EPD includes de-construction/demolition (C1), the necessary transport (C2) from the demolition site to the sorting location and distance to final disposal. The end of life stage includes the final disposal to landfill (C4), incineration (C3) and needed recycling processes up to the end-of-waste point (C3). Loads and benefits of recycling, re-use and exported energy are part of module D.
The default end-of-life scenarios of the annex (november 2020) to the NMD Determination method v1.0 have been used for the various materials in the product.

Waste scenario	Not removed [%]	Landfill [%]	Incineration [%]	Recycling [%]	Re-use [%]
finishes (adhered to wood, plastic, metal)	0.0	0.0	100.0	0.0	0.0
polyolefines (i.a. pe,pp) (i.a. pipes, foils)	0.0	10.0	85.0	5.0	0.0
wood 'clean', via residue	0.0	10.0	85.0	5.0	0.0
glass (i.a. flat glass)	0.0	30.0	0.0	70.0	0.0
aluminium, wrought alloy for buildings (i.a. profiles, sheets, pipes)	0.0	3.0	3.0	94.0	0.0
plastics, via residue	0.0	20.0	80.0	0.0	0.0
rockwool (insulation)	0.0	85.0	5.0	10.0	0.0

Transport by "Lorry (Truck), unspecified (default) | market group for (GLO)"	distance [km]
Not removed, stays in work	0.0
Landfill	100.0
Incineration	150.0
Recycling	50.0
Re-use	0.0

Life cycle stage D (benefits and loads beyond the system boundary)
This stage contains the potential loads and benefits of recycling and re-use of raw materials/products. The loads contain the needed recycling processes from end-of-waste-point up to the point-of-equivalence of the substituted primary raw material and a load for secondary material that will be lost at the end-of-life stage. The loads and benefits of recycling and reuse are included in this module. The benefits are calculated based on the primary content and the primary equivalent. In addition, the benefits of energy recovery are granted at this stage. The amount of avoided energy is

based on the Lower Heating Values of the materials and the efficiencies of the incinerators as mentioned in the NMD Determination method v1.0 or EcoInvent 3.6 (2019).

DECLARATION OF SVHC

The product does not contain any substances listed in the “Candidate List of Substances of Very High Concern (SVHC) for authorisation” exceeding 0.1% of the weight of the product.

REFERENCES

ISO 14040
ISO 14040:2006-10, Environmental management - Life cycle assessment - Principles and framework; EN ISO 14040:2006

ISO 14044
ISO 14044:2006-10, Environmental management - Life cycle assessment - Requirements and guidelines; EN ISO 14040:2006

ISO 14025
ISO 14025:2011-10: Environmental labels and declarations – Type III environmental declarations – Principles and procedures

EN 15804+A2
EN 15804+A2: 2019: Sustainability of construction works – Environmental Product Declarations – Core rules for the product category of construction products

MRPI verification protocol
MRPI®-EPD verification protocol November 2020.v4.0

REMARKS

This declaration is only valid for the specific design of this project and facade type. It is based on Scheldebouw's average supplier distances and processes.